REVISIONS					
REV.	REV. DATE	CHK. BY	CHK. DATE	ENG.	DESCRIPTION
04	08/12/08	CLH	09/03/2008	VLV	ADDED GENERATOR REMOTE PANEL BOX, THERMOSTAT BOX, AND TRIM

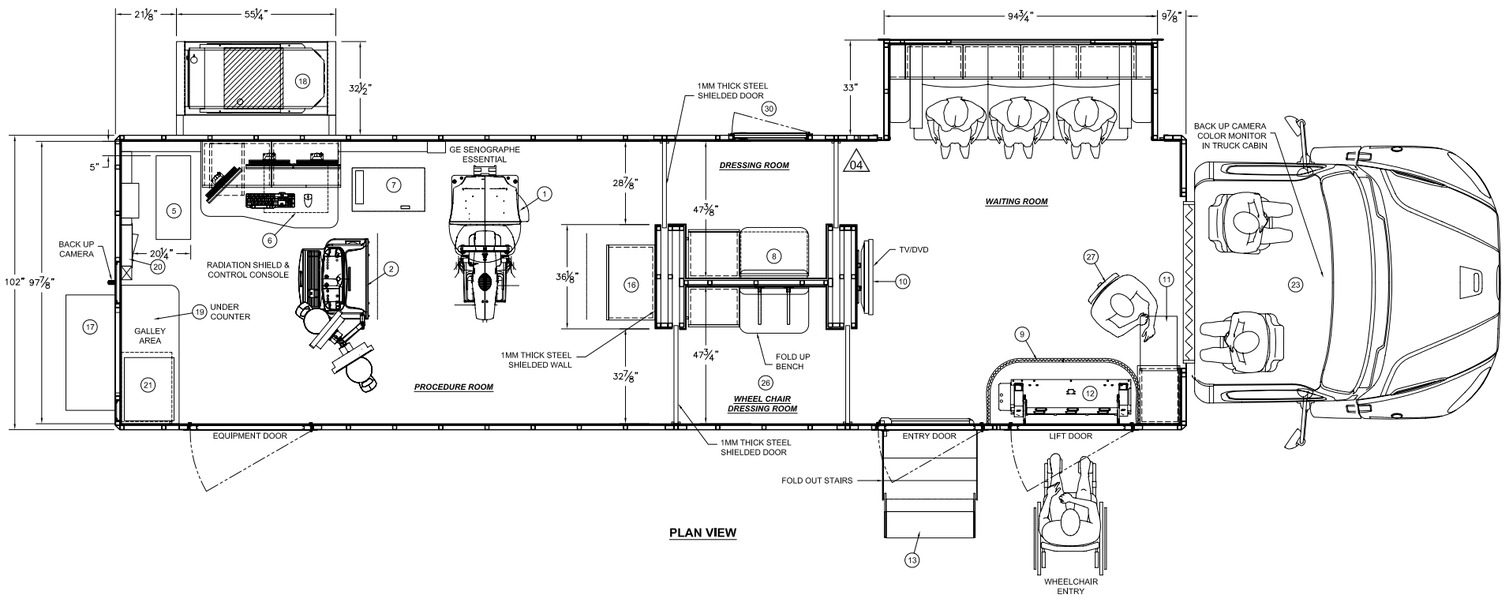

PLAN VIEW

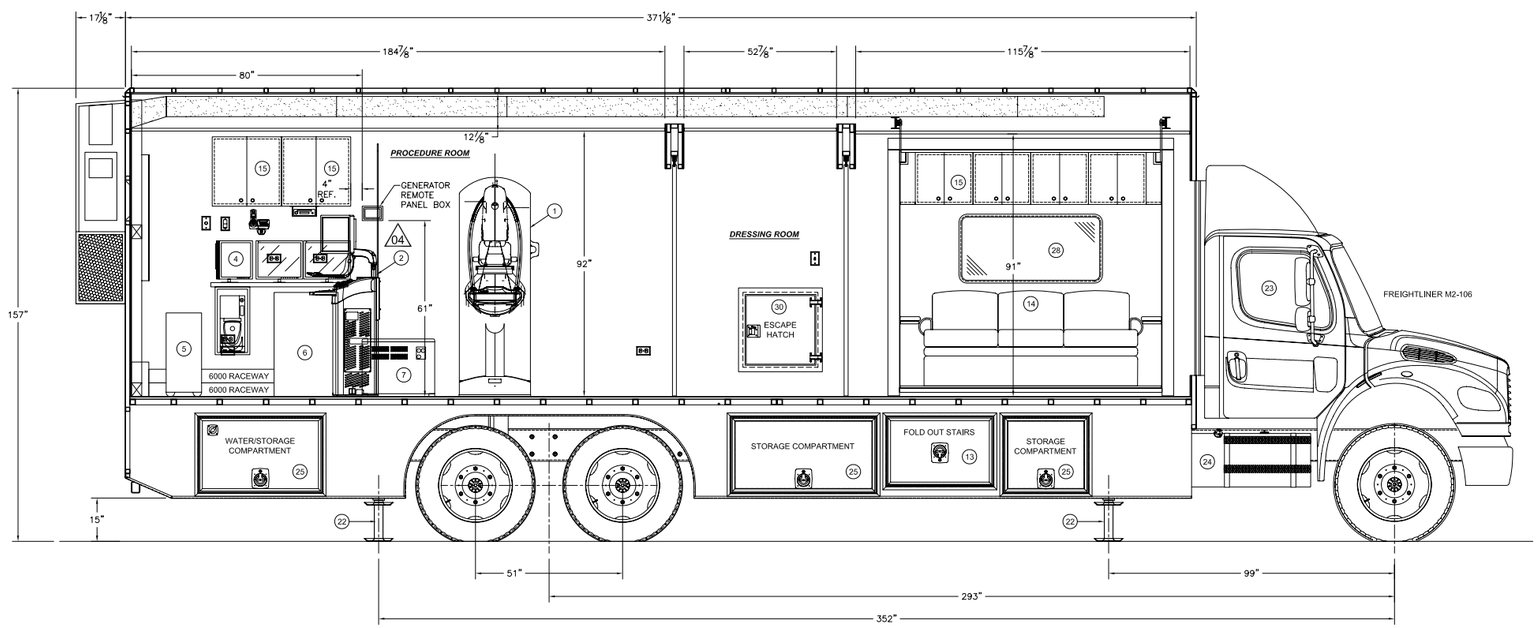

LEFT WALL ELEVATION VIEW

ITEM	QTY	PART NUMBER	DESCRIPTION
31	1		HUMIDIFIER
30	1		ESCAPE HATCH
29	1		SLIDE-OUT ASSEMBLY
28	1		24" X 48" FIXED TINTED WINDOW
27	1		(NON-ROLLING) RECEPTION CHAIR
26	1		WHEELCHAIR CHANGING AREA
25	6		LOWER COMPARTMENT DOORS
24	2		50 GAL. FUEL TANKS
23	1		FREIGHTLINER M2-106 CHASSIS
22	4		HYDRAULIC LEVELING LEGS (15,000 LB. CAP.)
21	1		MICROWAVE
20	1		LOAD CENTER 240V SINGLE PHASE
19	1		REFRIGERATOR
18	1		GENERATOR 20KW
17	1		36,000 BTU AIR CONDITIONER WITH 9KW HEAT PACKAGE
16	1		SYSTEM ACCESSORIES CABINET
15	6		OVERHEAD STORAGE CABINETS
14	1		WAITING ROOM COUCH
13	1		FOLD OUT STAIRS
12	1		RICON 403 LIFT
11	1		RECEPTION CABINET W/SLIDE-OUT COUNTER
10	1		TV, VCR, STEREO CONSOLE
9	1		WHEEL CHAIR LIFT CURTAIN
8	2		DRESSING ROOM CHANGING AREA
7	1		CONDITIONER CABINET
6	1		XRAY GENERATOR CABINET
5	1		UPS LAN PRO 10KVA
4	1		SENO ADVANTAGE VIEWING STATION
3	1		GEMS WIRELESS LAN ANT LOCATION OPTION
2	1		RADIATION SHIELD & CONTROL CONSOLE
1	1		GANTRY WITH DIGITAL DETECTOR (ESSENTIAL)

BILL OF MATERIALS

THIS DRAWING IS PROVIDED ON A CONFIDENTIAL BASIS SUBJECT TO RETURN ON DEMAND OF OSHKOSH SPECIALTY VEHICLES ("OSHKOSH"), WHICH RETAINS ANY AND ALL RIGHTS ASSOCIATED WITH IT AND THE ARTICLE OR ARTICLES IT REPRESENTS, DISCLOSURE, REPRODUCTION OR ALTERATION OF ANY PART OF THIS DRAWING OR MANUFACTURE, USE OR SALE OF THE ARTICLE OR ARTICLES REPRESENTED, IS PROHIBITED WITHOUT THE PRIOR WRITTEN AUTHORIZATION OF OSHKOSH, © OSHKOSH SPECIALTY VEHICLES (unpublished).

SHEET NUMBER: SHEET 1 OF 2	REFERENCE DRAWING: NONE	TITLE: GENERAL LAYOUT GE SENOGRAPHE ESSENTIAL MAMMOGRAPHY 40' FREIGHTLINER M2-112 SELF PRPELLED TRUCK W/ WALK THRU	DATE: 19FEB08 / SCALE: 3/4"=1'-0"
JOB# 236452	OSHKOSH SPECIALTY VEHICLES	16745 S. LATHROP AVENUE HARVEY, IL 60426 PHONE: (708) 596-5066 FAX: (708) 596-2480	DRAWN BY: D. BEEZHOLD CHECKED BY: DRAWING NUMBER: 10311-A01

CUSTOMER AUTHORIZATION		
COMPANY NAME:		
NAME (PRINT):	TITLE:	
SIGNATURE:		DATE: